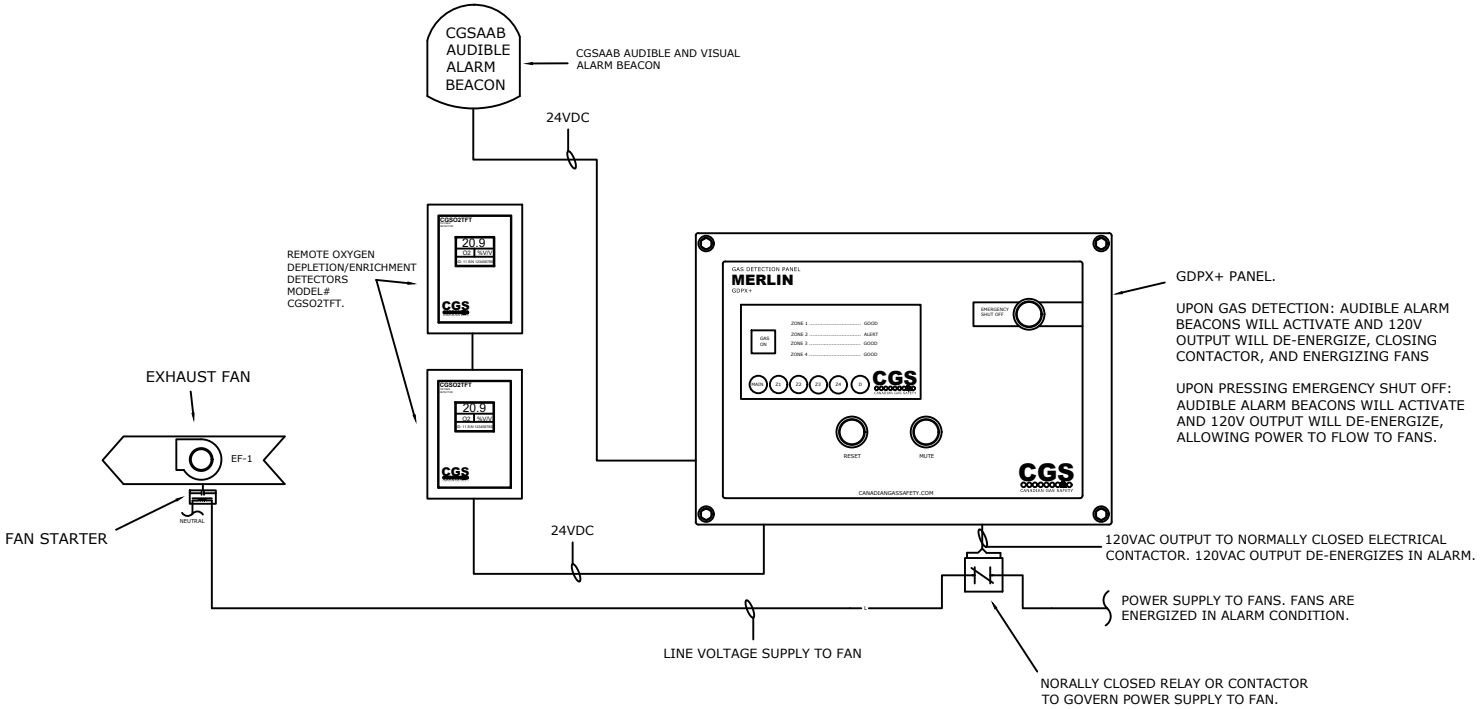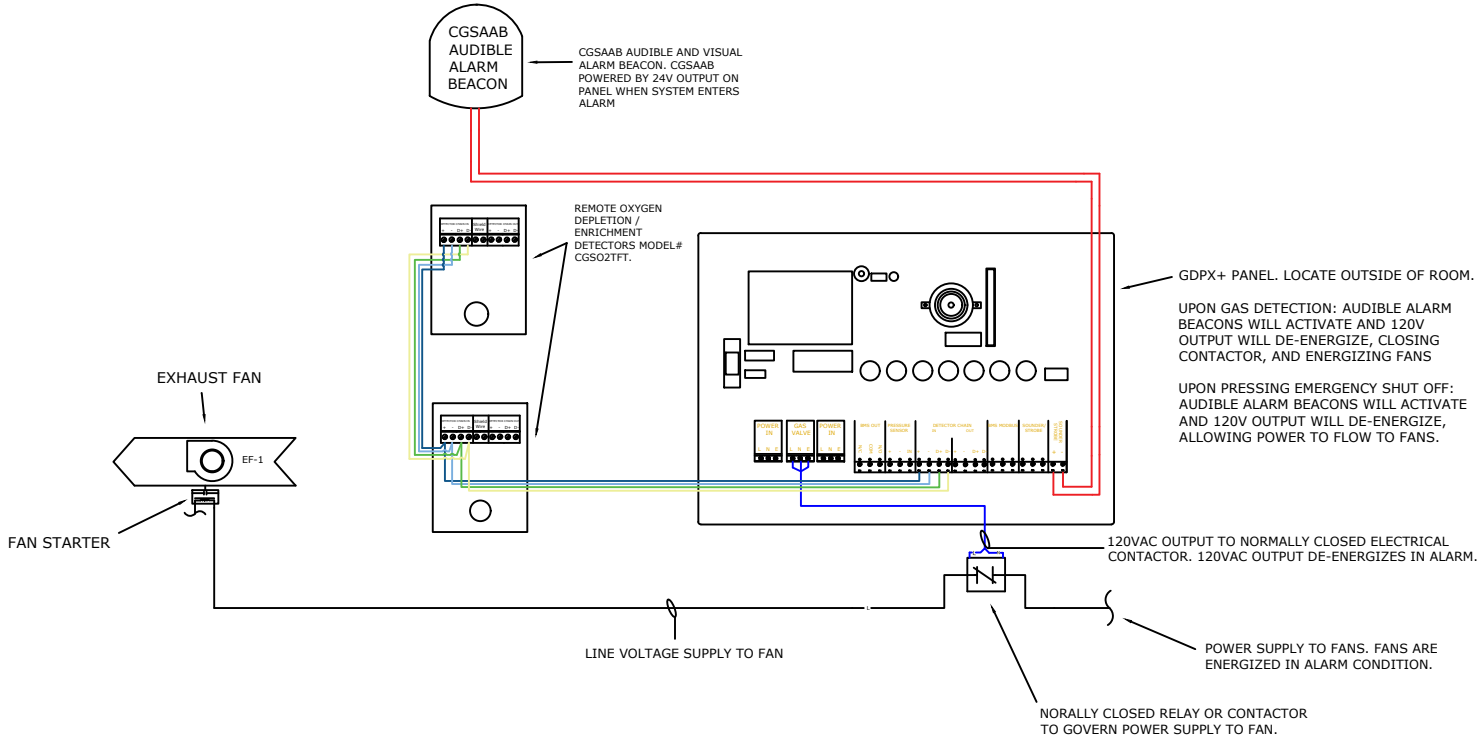OXYGEN DEPLETION / ENRICHMENT GAS DETECTION SYSTEM